Sola-Chan

MARINE SIGNAL LIGHTS

The Tideland Sola-Chan signal lanterns are unitised, low maintenance light systems powered by solar energy for reliable operation in remote areas. All parts of the Sola-Chan system are Tideland factory assembled and pre-wired. The system is simply lifted into place and secured. A standard system weighs from 70kg (154lb) to 87kg (191lb), depending upon model and configuration selected.

Characteristics

- LANTERNS - Sola-Chan can be fitted with Tideland's ML-300, ML-140 and ML-155 MaxLumina® standard marine lanterns or any of Tideland's range of LED lanterns.
- SOLAR MODULES - One 12-volt solar module mounts under the lantern by a galvanised steel or marine grade aluminium mounting bracket. Modules are available with the following ratings: 10W, 20W, 30W, 50W or 65W. Each module is equipped with bird scarers.
- CONSTRUCTION - Sola-Chan consists of a galvanised steel pedestal, base plate and two conductor wiring. Pedestal standard heights vary between 24" (610mm) and 54" (1372mm). An FG-2/12 structural GRP battery box is secured to the pedestal base. This weatherproof battery box can accommodate either one or two V12-MF batteries.
- SOLA-CHAN - Marine signal light systems are configured to meet site requirements. Shown here is a Sola-Chan unitised system with an MLED-300 MaxLumina® lantern and a 10W solar module mounted on a four foot pedestal.
- The solar panel can be easily rotated in 90° increments so that it faces the equator while the battery box remains accessible for maintenance.
- A series of Sola-Chan lights, individually powered, can be synchronised to flash in unison.
- Full monitor and control access.
- All approved IALA colours available.
- Optional padlock for battery box.

TIDELAND

a xylem brand

Sola-Chan

Unitised Low Maintenance Light System

DIMENSIONS

The overall weight and height of the complete unit will vary depending on chosen lantern, pedestal and battery options.

See individual lantern data sheets for details.

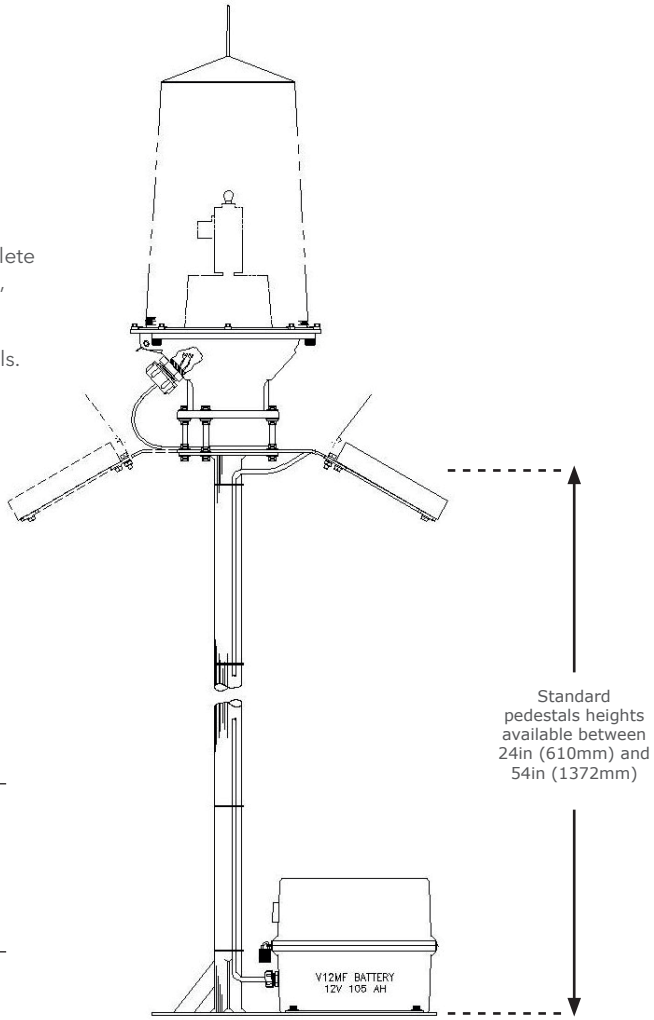

BASE DIMENSIONS

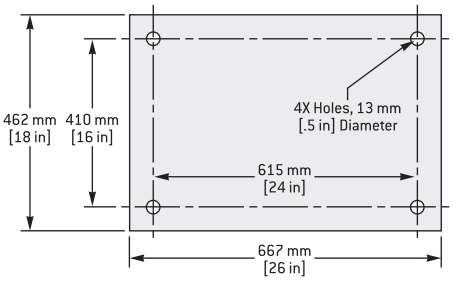

Tideland Signal Corporation
(USA)
us-sales@tidelandsignal.com

Tideland Signal Ltd
(Canada)
canada-sales@tidelandsignal.com

Tideland Signal Ltd
(Burgess Hill, UK)
emea-sales@tidelandsignal.com

Tideland Signal
(The Netherlands)
emea-sales@tidelandsignal.com

Tideland Signal Ltd
(Dubai, UAE)
emea-sales@tidelandsignal.com

Tideland Signal Pte Ltd
(Singapore)
asia-sales@tidelandsignal.com

Tideland Signal Pte Ltd
(Tianjin, China)
asia-sales@tidelandsignal.com

www.tidelandsignal.com

© 2016 Xylem, Inc. All names are registered tradenames or trademarks of Xylem Inc. or one of its subsidiaries. Technical changes reserved.

2016/11
E2R06